certifire

CERTIFICATE OF APPROVAL
No CF5902

This is to certify that, in accordance with
TS00 General Requirements for Certification of Fire Protection Products
The undermentioned products of

RUTLAND TRADING CO LTD
UNIT 4 HOLMEWOOD BUSINESS PARK, CHESTERFIELD ROAD, HOLMEWOOD, CHESTERFIELD, S42 5US UNITED KINGDOM
TEL: 01246 261491

Have been assessed against the requirements of the Technical Schedule(s) denoted below and are approved for use subject to the conditions appended hereto:

CERTIFIED PRODUCT	TECHNICAL SCHEDULE
ITS.11204, ITS.11204.3.5 & ITS.11204.DAX Concealed Overhead Door Closers	TS 34 - The Contribution of Controlled Door Closing Devices and Accessories to Fire Resisting Doorsets

Signed and sealed for and on behalf of Warringtonfire Testing and Certification Limited

Paul Duggan
Certification Manager

Issued: 6th September 2021
Reissued: 29th September 2026
Valid to: 5th September 2031

warringtonfire certifire CERTIFICATION

certifire UKAS PRODUCT CERTIFICATION 0087

This certificate is the property of Warringtonfire Testing and Certification Limited
Registered in England and Wales
Registered Office: 3rd Floor, Davidson Building, 5 Southampton Street, London, WC2E 7HA. Company Registration No: 11371436

CERTIFICATE No CF5902
RUTLAND TRADING CO LTD

1. This certification is provided to the client for its own purposes, and we cannot opine on whether it will be accepted by Building Control authorities or any other third parties for any purpose.

2. This approval relates to the following concealed overhead door closing device and configurations:

	ITS.11204	*ITS.11204.3.5*	*ITS.11204.DAX*
Single-action	✓	✓	✗
Double-action	✗	✗	✓
Body door mounted in top edge	✓	✓	✓
Body transom mounted	✗	✗	✗

Key: ✓ - approved ✗ - Not approved

Note: Where alternative arms for non-fire applications are included within the packaging, the use of these components on fire resisting door assemblies will invalidate the certification.

3. This approval relates to their use with the following door assemblies: -

ITS.11204, ITS.11204.3.5 - Code ITT - 20 minute to 60 minute door assemblies incorporating intumescent perimeter seals and consisting of timber faced and edged leaves with timber or cellulosic cores, hung in timber or cellulosic frames.

ITS.11204.DAX - Code ITT - 60 minute door assemblies only, incorporating intumescent perimeter seals and consisting of timber faced and edged leaves with timber or cellulosic cores, hung in timber or cellulosic frames.

4. The closers are approved on the basis of:

i) Initial type testing to EN1154 and BS EN 1634-1
ii) An appraisal against TS34
iii) Certification of quality management system.
iv) Inspection and surveillance of factory production control
v) On-going audit testing in accordance with EN 1154 requirements

5. This approval relates to the use of the above closers in contributing to the fire resistance performance of timber based doorsets, as defined in BS EN 1634-1:2014+A1:2018 or BS 476-22: 1987.

6. The closers shall be fixed with screws supplied by the closer manufacturer.

7. Concealed closers shall only be fitted to doorsets which have previously been shown capable of accommodating the installation of similar concealed items at the head of the doorset, without detriment to the doorset's performance.

This certificate is the property of Warringtonfire Testing and Certification Limited
Registered in England and Wales
Registered Office: 3rd Floor, Davidson Building, 5 Southampton Street, London, WC2E 7HA. Company Registration No: 11371436

8. This approval is applicable only to the specified closer when mounted with its body concealed within the door leaf and its guide arm channel mounted to the head of the door frame, when fitted with the specified intumescent protection kit and used with door assemblies that are CERTIFIRE approved or have achieved the appropriate fire resistance performance when tested at a laboratory accredited to IS/IEC 17025 (under International Laboratory accreditation Cooperation (ILAC) membership), in accordance with BS 476: Part 22: 1987 and/or BS EN 1634:1 and having power ratings appropriate to the leaf sizes subject to a minimum size 3 (as specified in BS EN 1154).

9. This approval relates to ITS.11204 concealed overhead closers used with single-action, latched or unlatched single-leaf or double-leaf, assemblies consisting of timber faced and edged leaves with timber or cellulosic cores and in timber frames:

   a. ITT30 - The bodies mounted in the door leaf, are approved for 30 minute single-action doorsets of the following specification (Code ITT):
      i. Door leaves shall not less than 44 mm thick doors.
      ii. The door frame shall consist of softwood or hardwood with a minimum density of 510 kg/m³ and with a minimum thickness of 30 mm (excluding any stop).
      iii. The closer body was mounted centrally within the door thickness and the guiderail centrally within the frame rebate.
      iv. The closer shall be fitted with intumescent protection in the form of:
         - ITS.11204 – kit reference IP.114:
            - ❖ 2 mm thickness of graphite-based intumescent sheet material (over the entire forend and recess in the top edge of the door.
            - ❖ 2 mm thickness of graphite-based intumescent sheet material to the vertical edges only of the guiderail.
         - ITS.11204.3.5 – kit reference IP.114M:
            - ❖ 2 mm thickness of graphite-based intumescent sheet material (over the entire forend and recess in the top edge of the door.
            - ❖ 2 mm thickness of graphite-based intumescent sheet material to the vertical edges and top edge of the guiderail.

   b. ITT60 - The bodies mounted in the door leaf, are approved for 60 minute single-action doorsets of the following specification (Code ITT):
      i. Door leaves shall not less than 54 mm thick doors.
      ii. The door frame shall consist of hardwood with a minimum density of 640 kg/m³ and with a minimum thickness of 44 mm (excluding any stop).
      iii. The closer body was mounted centrally within the door thickness and the guiderail centrally within the frame rebate.
      iv. The closer shall be fitted with intumescent protection in the form of:
         - ITS.11204 – kit reference IP.114:

This certificate is the property of Warringtonfire Testing and Certification Limited
Registered in England and Wales
Registered Office: 3rd Floor, Davidson Building, 5 Southampton Street, London, WC2E 7HA. Company Registration No: 11371436

- ❖ 2 mm thickness of graphite-based intumescent sheet material (over the entire forend and recess in the top edge of the door.
- ❖ 2 mm thickness of graphite-based intumescent sheet material to the vertical edges only of the guiderail.

- ITS.11204.3.5 – kit reference IP.114M:
  - ❖ 2 mm thickness of graphite-based intumescent sheet material (over the entire forend and recess in the top edge of the door.
  - ❖ 2 mm thickness of graphite-based intumescent sheet material to the vertical edges and top edge of the guiderail.

v. In addition for ITT60 applications the perimeter intumescent fire seals within the door or frame shall by-pass the guide rail by a minimum of 3 mm on each side.

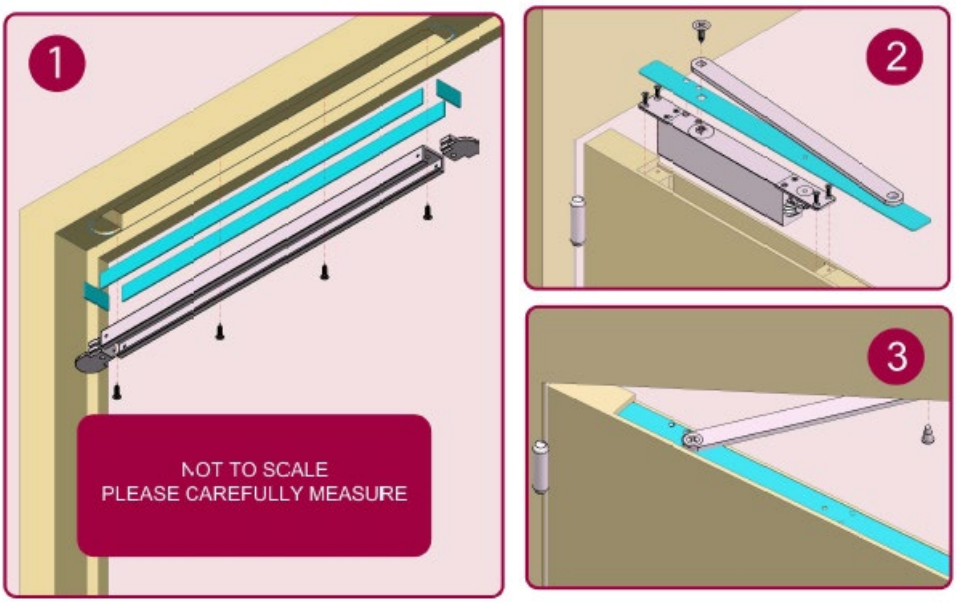

Kit reference IP.114

This certificate is the property of Warringtonfire Testing and Certification Limited
Registered in England and Wales
Registered Office: 3rd Floor, Davidson Building, 5 Southampton Street, London, WC2E 7HA. Company Registration No: 11371436

CERTIFICATE No CF5902
RUTLAND TRADING CO LTD

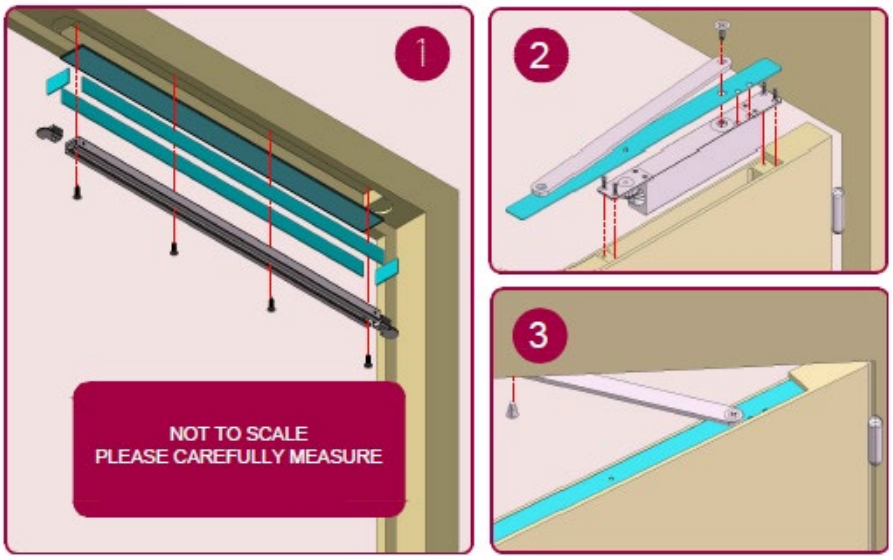

Kit reference IP.114M:

Note: Failure to install intumescent protection identified above will invalidate this certificate

10. This approval relates to ITS.11204.DAX concealed overhead closers used with double-action, latched or unlatched single-leaf or double-leaf, assemblies consisting of timber faced and edged leaves with timber or cellulosic cores and in timber frames:

a. ITT60 - The bodies mounted in the door leaf, are approved for 60 minute single-action doorsets of the following specification (Code ITT):
   i. Door leaves shall not be less than 54 mm thick doors.
   ii. The door frame shall consist of hardwood with a minimum density of 640 kg/m³ and with a minimum section of 43 mm thick x 89 mm wide.
   iii. The closer body, top and bottom strap shall be mounted centrally within the door thickness, and the guiderail and top pivot mounted a minimum of 44.5 mm from either face of the frame to the centre of the guiderail/pivot.

   iv. The closer body, guiderail, top pivot and top and bottom straps shall be fitted with intumescent protection in the form of:
      - Closer body – kit reference IP.114190 Part A:
         - ❖ 2 mm thickness of graphite-based intumescent sheet material (over the entire forend and recess in the top edge of the door).
      - Top pivot strap – kit reference IP.190 Part A:
         - ❖ 2 mm thickness of graphite-based intumescent sheet material to the face of the top strap.
      - Top pivot strap – kit reference IP.190 Part C:

This certificate is the property of Warringtonfire Testing and Certification Limited
Registered in England and Wales
Registered Office: 3rd Floor, Davidson Building, 5 Southampton Street, London, WC2E 7HA. Company Registration No: 11371436

- ❖ 2No. 2 mm thickness of graphite-based intumescent sheet material; fitted on top of the IP.114190 Part A, set flush with the end of the IP.90 Part A.

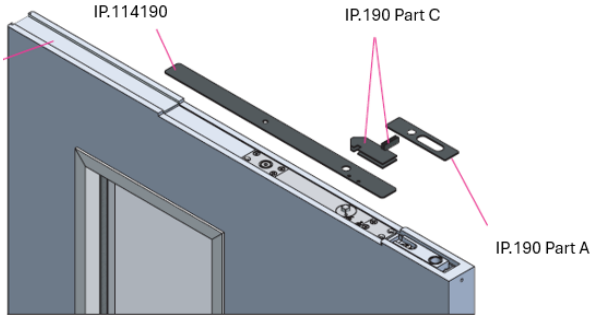

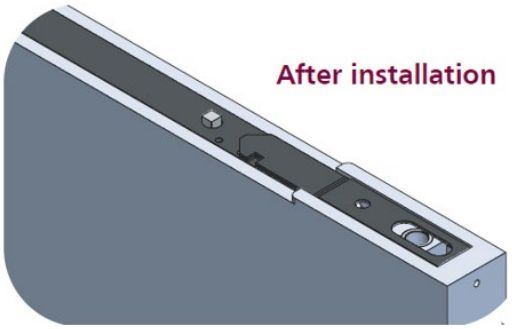

- Guiderail – kit reference IP.114DAX:
  - ❖ 2 mm thickness of graphite-based intumescent sheet material combined with wipe seals in an aluminium carrier to the long vertical edges only of the guiderail; continuing past the top pivot.

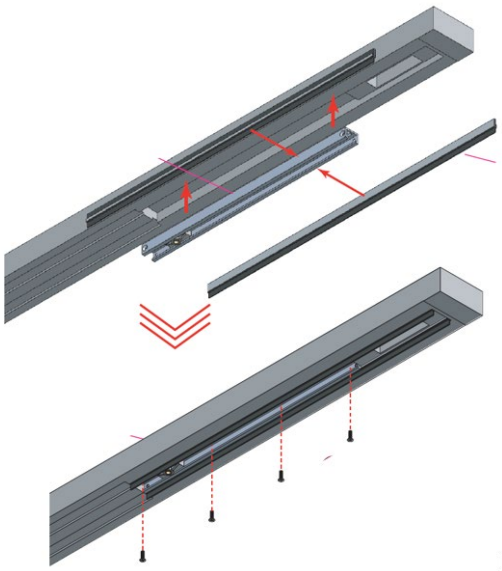

- ❖ Additionally the perimeter intumescent seal in the frame head shall by-pass the IP.114DAX wipe seals and aluminium carrier by a minimum of 9.5 mm on each side.

This certificate is the property of Warringtonfire Testing and Certification Limited
Registered in England and Wales
Registered Office: 3rd Floor, Davidson Building, 5 Southampton Street, London, WC2E 7HA. Company Registration No: 11371436

- Top pivot PS.190.SS.PB – kit reference IP.190 Part D and E:
  - ❖ IP.190 Part D 1 mm thickness of mono ammonium phosphate based intumescent sheet material to all vertical faces of the recess, and IP.190 Part E 1 mm thickness of mono ammonium phosphate based intumescent sheet material beneath the cover plate:

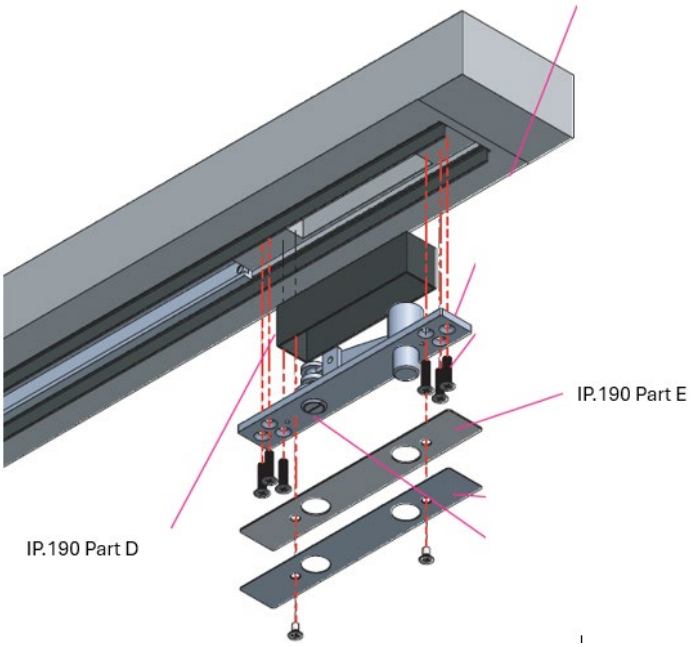

- Bottom pivot strap – kit reference IP.190 Part B:
  - ❖ 2 mm thickness of graphite-based intumescent sheet material; fitted on top of the PS.190 floor strap.
  - ❖ Additionally the perimeter intumescent seal in the bottom edge shall by-pass the bottom strap by a minimum of 8 mm on each side.

Note: Failure to install intumescent protection identified above will invalidate this certificate

11. Where the closers are fitted to door leaves or frames that are manufactured from low-density cellulosic- based material, the door assembly shall have previously been shown capable of accommodating the installation of closers at the head of the doorset, without detriment to the door assembly's performance.

12. ITT30 and 60 timber doorsets shall be installed in accordance with BS 8214.

This certificate is the property of Warringtonfire Testing and Certification Limited
Registered in England and Wales
Registered Office: 3rd Floor, Davidson Building, 5 Southampton Street, London, WC2E 7HA. Company Registration No: 11371436

CERTIFICATE No CF5902
RUTLAND TRADING CO LTD

13. All door hardware is subject to the acceptance by the chosen door assembly supplier's tested, assessed, or certificated scope, which generally identifies the types of hardware approved, the required specification/design based on the key materials/ maximum size (e.g. guiderail, body, faceplate, top centre, bottom, strap, etc.), and the application of any additional intumescent protection.

    On this basis, approval should be sought from the specific door assembly supplier to ensure compliance based on this assessed/certificated scope.

14. The approval relates to on-going production. The product and/or its immediate packaging are identified with the manufacturer's name, the product name or number, the CERTIFIRE name or name and mark, together with the CERTIFIRE certificate number and application where appropriate.

This certificate is the property of Warringtonfire Testing and Certification Limited
Registered in England and Wales
Registered Office: 3rd Floor, Davidson Building, 5 Southampton Street, London, WC2E 7HA. Company Registration No: 11371436

certifire

CERTIFICATE No CF5902
RUTLAND TRADING CO LTD

15. The following table shows acceptable doorset types and fire resistance periods for the ITS.11204 and ITS.11204.3.5 concealed closer:

	Approved Door Type			
Class	**IMM**	**MM**	**ITT**	**ITM**
BS476-22				
FD20	✗	✗	✓	✗
FD30	✗	✗	✓	✗
FD60	✗	✗	✓	✗
FD90	✗	✗	✗	✗
FD120	✗	✗	✗	✗
FD240	✗	✗	✗	✗
EN1634-1				
Integrity only	**IMM**	**MM**	**ITT**	**ITM**
20	✗	✗	✓	✗
30	✗	✗	✓	✗
60	✗	✗	✓	✗
90	✗	✗	✗	✗
120	✗	✗	✗	✗
240	✗	✗	✗	✗
Integrity/insulation	**IMM**	**MM**	**ITT**	**ITM**
20	✗	✗	✓	✗
30	✗	✗	✓	✗
60	✗	✗	✓	✗
90	✗	✗	✗	✗
120	✗	✗	✗	✗
240	✗	✗	✗	✗

Key:

✓ - Approved
✗ - Not approved

This certificate is the property of Warringtonfire Testing and Certification Limited
Registered in England and Wales
Registered Office: 3rd Floor, Davidson Building, 5 Southampton Street, London, WC2E 7HA. Company Registration No: 11371436

CERTIFICATE No CF5902
RUTLAND TRADING CO LTD

16. The following table shows acceptable doorset types and fire resistance periods for the ITS.11204.DAX concealed closer:

	Approved Door Type			
Class	**IMM**	**MM**	**ITT**	**ITM**
BS476-22				
FD20	✗	✗	✗	✗
FD30	✗	✗	✗	✗
FD60	✗	✗	✓	✗
FD90	✗	✗	✗	✗
FD120	✗	✗	✗	✗
FD240	✗	✗	✗	✗
EN1634-1				
Integrity only	**IMM**	**MM**	**ITT**	**ITM**
20	✗	✗	✗	✗
30	✗	✗	✗	✗
60	✗	✗	✓	✗
90	✗	✗	✗	✗
120	✗	✗	✗	✗
240	✗	✗	✗	✗
Integrity/insulation	**IMM**	**MM**	**ITT**	**ITM**
20	✗	✗	✗	✗
30	✗	✗	✗	✗
60	✗	✗	✓	✗
90	✗	✗	✗	✗
120	✗	✗	✗	✗
240	✗	✗	✗	✗

Key:

✓ - Approved
✗ - Not approved

This certificate is the property of Warringtonfire Testing and Certification Limited
Registered in England and Wales
Registered Office: 3rd Floor, Davidson Building, 5 Southampton Street, London, WC2E 7HA. Company Registration No: 11371436

17. Doors are categorised as the following types:

Code ITT - 20 minute to 120 minute door assemblies door assemblies incorporating intumescent perimeter seals and consisting of timber faced and edged leaves with timber or cellulosic cores, hung in timber or cellulosic frames.

Code ITM - 20 minute to 120 minute door assemblies door assemblies incorporating intumescent perimeter seals and consisting of timber faced and edged leaves with timber or cellulosic cores, hung in steel frames.

Code MM - 20 to 240 minute doorsets consisting of uninsulated or insulated predominantly steel leaves, hung in steel frames without intumescent seals.

Code IMM - 20 to 240 minute doorsets consisting of uninsulated or insulated predominantly steel leaves, hung in steel frames with intumescent seals.

Scope of Approval:

- The closer may not be fitted to timber doorsets without perimeter intumescent fire seals within the frame rebate or door edge.
- ITT door leaves shall be of solid lignocellulosic construction in the closer area encompassing the entire closer body.
- Concealed overhead closers and their guide channel shall only be fitted in conjunction with the intumescent protection detailed previously in this certificate.
- Concealed overhead closers shall only be fitted to doorsets which have previously been shown capable of accommodating the installation of similar concealed items at the head of the doorset, without detriment to the doorset's performance.
- Mechanical Hold open option is not approved.
- The following specific guide channels are approved for use with the ITS.11204 and ITS.11204.3.5 single-action concealed closers:
    - Non-hold open single-action guiderail with lever arm 29 mm wide x 19 mm high x 460 mm long.
    - ITS11204 Non-hold open Micro Rail single-action guiderail with lever arm 20 mm wide x 13 mm high x 460 mm long.

This certificate is the property of Warringtonfire Testing and Certification Limited
Registered in England and Wales
Registered Office: 3rd Floor, Davidson Building, 5 Southampton Street, London, WC2E 7HA. Company Registration No: 11371436

- The plastic cover caps to the end of the guiderails are approved for use on single-action ITT30 and ITT 60 door assemblies only

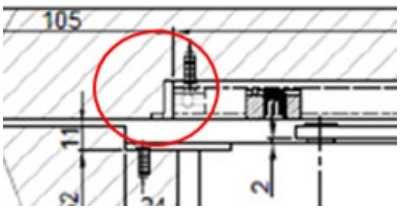

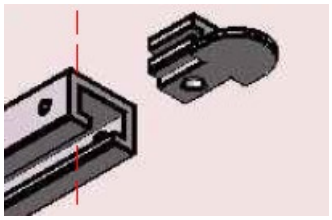

- The following specific guide channels are approved for use with the ITS.11204.DAX double-action concealed closers:
  - Non-hold open double-action guiderail with lever arm 29 mm wide x 19 mm high x 460 mm long.
  - The plastic cover caps to the end of the guiderails are not permitted

- The following functions are supported by this certification:

Closer Ref.	Latch Control	Backcheck	Delayed-Action
ITS.11204	✓	×	×
ITS.11204.3.5	✓	×	×
ITS.11204.DAX	✓	×	×

Classification code

ITS.11204 & ITS.11204.3.5:

3	**8**	**4 2**	**1**	**1**	**3**

ITS.11204.DAX:

3	**8**	**4 2**	**1**	**1**	**3**

Note: power ratings shall be appropriate to the leaf sizes subject to a minimum size 3 (as specified in BS EN 1154).

This certificate is the property of Warringtonfire Testing and Certification Limited
Registered in England and Wales
Registered Office: 3rd Floor, Davidson Building, 5 Southampton Street, London, WC2E 7HA. Company Registration No: 11371436

CERTIFICATE No CF5902
RUTLAND TRADING CO LTD

Further Information

Further information regarding the details contained in this certificate may be obtained from Rutland UK. (Tel: 01246 261491).

Further information regarding CERTIFIRE certification and other approved products can be obtained from CERTIFIRE (Tel: 01925 646777).

This certificate is the property of Warringtonfire Testing and Certification Limited
Registered in England and Wales
Registered Office: 3rd Floor, Davidson Building, 5 Southampton Street, London, WC2E 7HA. Company Registration No: 11371436