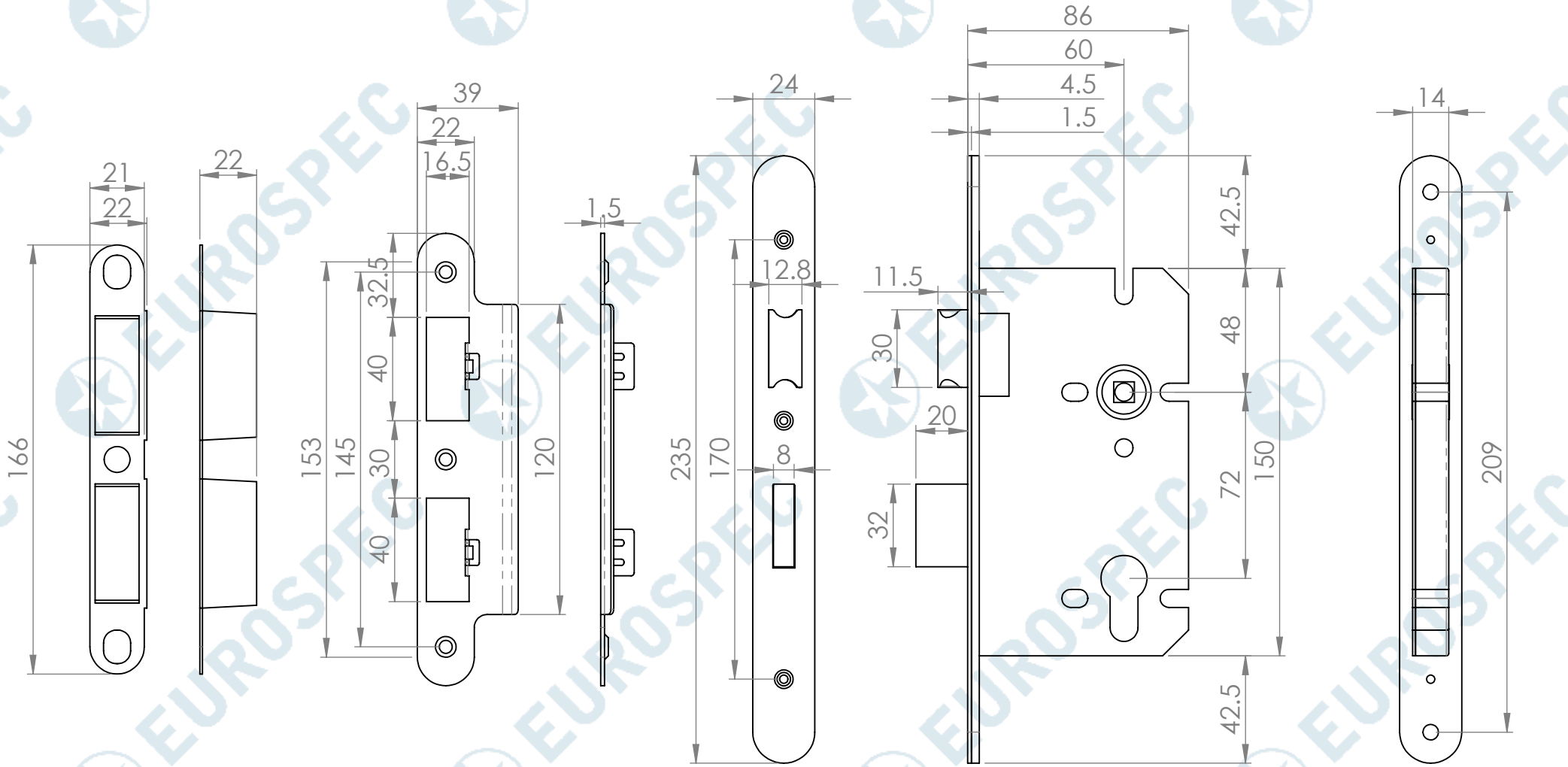

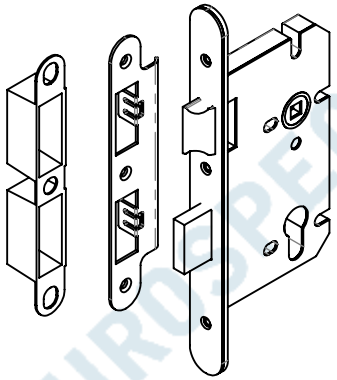

EUROSPEC

DLS7260EP-R

This drawing is the property of Carlisle Brass Limited, all design rights reserved